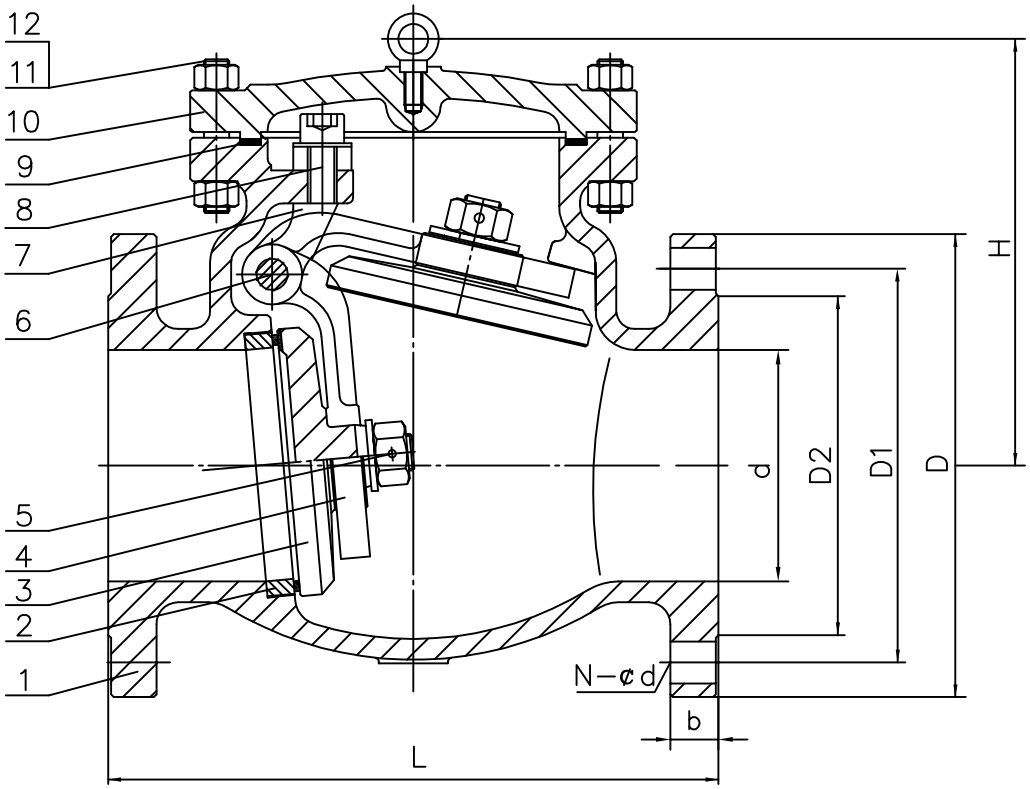


## Applicable Standards

1.Design Standard: API 6D
2.Face To Face Dimensions: ASME B16.10.
3.END Flange Dimensions: ASME B16.5
4.Test Standard: API 598

## Property Specification

| | | |
|---|---|---|
| Nominal Pressure CLASS | 150LB | MPa |
| Hydraulic Shell Test | 3.1 | |
| Hydraulic Seat Seal Test | 2.2 | |
| Applicable Temperature | −29℃ To 425℃ | |
| Applicable Medium | Water,Steam,Oil Products | |

| NO. | PART NAME | MATERIAL |
|---|---|---|
| 12 | Bonnet Nut | A194 2H |
| 11 | Bonnet Bolt | A193 B7 |
| 10 | Bonnet | A216 WCB |
| 9 | Gasket | SS304+Graphite |
| 8 | Screw | A193 B7 |
| 7 | York | A216 WCB |
| 6 | Pin | A182 F6a |
| 5 | Nut | A194 2H |
| 4 | Hinge | A216 WCB |
| 3 | Disc | A216 WCB+13Cr |
| 2 | Seat | A216 WCB+STL |
| 1 | Body | A216 WCB |

mm

| size | d | L | D | D1 | D2 | b | N−¢d | H |
|---|---|---|---|---|---|---|---|---|
| 2” | 51 | 203 | 152 | 121 | 92 | 19 | 4−19 | 132 |
| 3” | 76 | 241 | 190 | 152.4 | 127 | 24 | 4−19 | 176 |
| 4” | 102 | 292 | 229 | 190 | 157 | 24 | 8−19 | 198 |
| 6” | 152 | 356 | 279 | 241 | 216 | 26 | 8−22 | 320 |
| 8” | 203 | 495 | 343 | 298.4 | 270 | 29 | 8−22 | 380 |

SWING CHECK VALVE

KOSLAN VALVE

Assembly Drawing

SWING CHECK VALVE−150LB